GE Security

Product Data Sheet

www.GESecurity.com

KTD-314

Digiplex Code Converter

Overview

The KTD-314 is an interface device that converts Pelco System 9500 Extended Protocol commands to a Digiplex® RS422 output, enabling a Pelco Coaxitron system to control GE Security PTZ (pan/tilt/zoom) receivers and domes. The output enables pan/tilt, lens, autopan, and preset control of a CyberDome®, a KTA-12 series dome, or a KTD-120 series receiver. One KTD-314 is required for each GE Security receiver in a Pelco system.

Outstanding Features

The easy-to-install, compact unit features wall-mountable housing, BNC connectors for coaxial cables, and a removable terminal strip for power and RS422 connections. The KTD-314 is powered by 24 VAC, enabling it to be located near the receiver and connected to the same power source (power supply not included). Additionally, the unit's transformer provides isolation to prevent video interference. A LED video signal indicator displays the status of incoming video and control signals.

Standard Features

- **Converts Pelco protocol to Digiplex protocol**
- **System 9500 Coaxitron interface**
- **Preset control of PTZ receiver**
- **Compact and wall-mountable**
- **Easy to install**
- **Removable terminal strip**
- **24 VAC power**
- **Isolated transformer**
- **LED video signal indicator**

KTD-314

Digiplex Code Converter

Specifications

Electrical
- Input voltage: 24 VAC
- Input power: 2.5 VA
- Output Digiplex port: RS422

Data
- RS422 speed: 4800 baud
- Protocol data in: Pelco Coaxitron 9500 extended protocol
- Protocol data out: Digiplex RS422

Video
- Input (1): 1 V pk-pk
- Output (1): 1 V pk-pk
- Impedance: Hi-Z

Commands Recognized
- Autopan, find preset, set preset, zoom in, zoom out, focus near, focus far, iris open, iris close, tilt up, tilt down, pan left, and pan right

Connections
- Power, Digiplex: Four-position removable terminal strip
- Video coax: Two BNC connectors

Mechanical
- Weight: 4 oz (113 g)
- Construction: 0.050 in (1.27 mm) aluminum
- Finish: Black anodized

Command Translation
- The list below represents compatible commands between Pelco Coaxitron controllers and Digiplex receivers. For this Digiplex result / Use this Pelco entry:
- focus near/FOCUS NEAR
- focus far/FOCUS FAR
- iris open/IRIS OPEN
- iris close/IRIS CLOSE
- zoom in/ZOOM TELE
- zoom out/ZOOM WIDE
- autopan on/PAN AUTO
- autopan off/PAN MAN
- pan right/Joystick Right
- pan left/Joystick Left
- tilt up/Joystick Up
- tilt down/Joystick Down
- find preset/PRESET GO
- set preset/PRESET SET

Notes
- Pelco controllers do not have all the commands necessary to completely control all CyberDome functions.
- If variable speed control of the GE Security dome is desired, operators must use a Pelco controller with variable speed control.
- Preset titling and other programming in CyberDomes can be done by connecting a GE Security controller to the dome.
- Pelco "zones" and "zone titling" are not supported.

Related Diagram

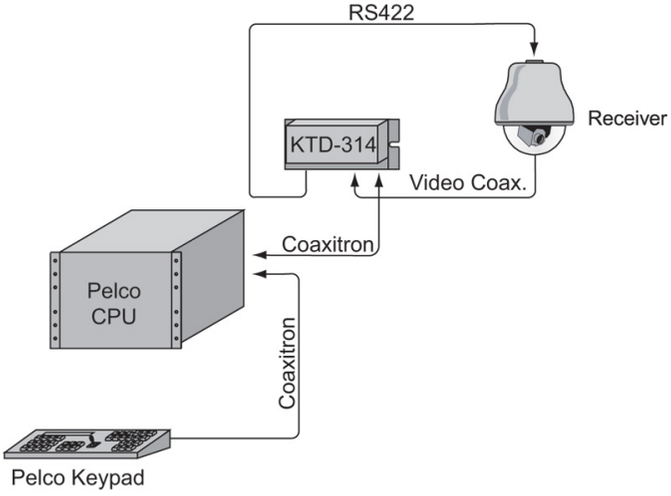

Ordering Information

KTD-314

GE Security

Mailing Address
4575 Research Way, STE 250
Corvallis, OR 97333 USA
www.GESecurity.com

Americas
800-469-1676 (US only)
tel 541-754-9133
fax 541-754-7162

Asia
tel 852-2907-8108
fax 852-2142-5063

Australia
tel 61-3-9259-4700
fax 61-3-9259-4799

Europe
tel 32-2-725-11-20
fax 32-2-721-86-13

Latin America
tel 305-267-4301
fax 305-267-4300

www.GESecurity.com

As a company of innovation, GE Security reserves the right to change product specifications without notice. For the latest product specifications, visit GE Security online at www.GESecurity.com or contact your GE Security sales representative.
IPS-KTD-314-2004-06-15 02:03:23 [NOT RELEASED]